A Real-Time Research Project Report

on

Smart Waste Segregation Dustbin

submitted in partial fulfillment of the requirements for the award of the degree

of

Bachelor of Technology

in

COMPUTER SCIENCE AND ENGINEERING (AI & ML)

by

S. Lokeshwari	[247R1A66A9]
D. Akshaya	[247R1A6676]
S. Homith Praveen	[247R1A66B0]
Y. Ramu	[247R1A66C7]

Under the guidance of

G. Pavan

Assistant Professor

DEPARTMENT OF COMPUTER SCIENCE AND ENGINEERING (AI & ML)

CMR TECHNICAL CAMPUS

UGC AUTONOMOUS

Accredited by NBA & NAAC with 'A' Grade

Approved by AICTE, New Delhi and JNTU Hyderabad

Kandlakoya (V), Medchal Road, Hyderabad – 501401

April, 2026

DEPARTMENT OF COMPUTER SCIENCE AND ENGINEERING (AI&ML)

CERTIFICATE

This is to certify that the Real-Time Research Project Report entitled **"SMART WASTE SEGREGATION DUSTBIN"** being submitted by **S. LOKESHWARI [247R1A66A9] D. AKSHAYA [247R1A6676] S. HOMITH PRAVEEN [247R1A66B0] Y. RAMU [247R1A66C7]** in partial fulfillment of the requirements for the award of the degree of Bachelor of Technology in **COMPUTER SCIENCE AND ENGINEERING (AI & ML)** to the **Jawaharlal Nehru Technological University, Hyderabad** is a record of bonafide work carried out by them under my guidance and supervision during the Academic Year 2025 – 26.

The results embodied in this report have not been submitted to any other University or Institute for the award of any other degree.

G. Pavan
Assistant Professor
Project Guide

Dr. S Rao Chintalapudi
Head of the Department

ACKNOWLEDGEMENT

Apart from the efforts of us, the success of any project depends largely on the encouragement and guidelines of many others. We take this opportunity to express our gratitude to the people who have been instrumental in the successful completion of this project.

We take this opportunity to express my profound gratitude and deep regard to my guide **G. Pavan,** Assistant Professor, for his exemplary guidance, monitoring and constant encouragement throughout the project work. The blessing, help and guidance given by him shall carry us a long way in the journey of life on which we are about to embark.

We are also thankful to **Dr. S Rao Chintalapudi**, Head, Department of Computer Science and Engineering (AI&ML) for providing encouragement and support for completing this project successfully.

We are obliged **to Dr. A. Raji Reddy**, Director for being cooperative throughout the course of this project. We also express our sincere gratitude to Sri. **Ch. Gopal Reddy**, Chairman for providing excellent infrastructure and a nice atmosphere throughout the course of this project.

The guidance and support received from all the members of **CMR Technical Campus** who contributed to the completion of the project. We are grateful for their constant support and help.

Finally, we would like to take this opportunity to thank our family for their constant encouragement, without which this assignment would not be completed. We sincerely acknowledge and thank all those who gave support directly and indirectly in the completion of this project.

S. LOKESHWARI	[247R1A66A9]
D. AKSHAYA	[247R1A6676]
S. HOMITH PRAVEEN	[247R1A66B0]
Y. RAMU	[247R1A66C7]

ABSTRACT

The *Smart Waste Segregation Dustbin (AquaSense)* is an innovative solution designed to improve hygiene and automate waste disposal. The system uses an Arduino Uno microcontroller along with sensors such as an ultrasonic sensor and a soil moisture sensor to detect waste type and user presence. The system automatically opens the lid and segregates waste into wet and dry categories. This reduces human contact, enhances cleanliness, and supports sustainable waste management practices.

The system utilizes an Arduino Uno microcontroller integrated with an ultrasonic sensor and a soil moisture sensor to detect user presence and classify waste as wet or dry. Based on sensor inputs, a servo motor mechanism opens the lid and directs waste into appropriate compartments.

This project aims to reduce human contact, improve hygiene, and contribute to sustainable urban living. The system is cost-effective, easy to implement, and suitable for deployment in public areas, hospitals, and smart cities.

LIST OF FIGURES

S. No	Figure Name	Page No
Figure 4.2	Proposed Methodology	5
Figure 4.3.1	Class Diagram	6
Figure 4.3.2	Use Case Diagram	7
Figure 4.3.3	Sequence Diagram	8
Figure 4.3.4	Component Diagram	8
Figure 4.3.5	Activity Diagram	9

Table of Contents

Chapter Title	Page No
Abstract	l
List of Figures	ll
1. Introduction	
1.1 Motivation	1
1.2 Problem Statement	1
1.3 Project Objective	1
2. Literature Survey	
2.1 Smart Dustbin Systems for Waste Management	2
2.2 Sensor-Based Waste Segregation	2
2.3 Arduino-Based Smart Waste Systems	2
2.4 Advanced Smart Dustbin Technologies	3
2.5 Limitations of Existing Systems	3
2.6 Motivation for Proposed System	3
2.7 Summary	3
3. Requirement Specification	
3.1 Software Requirements	4
3.2 Hardware Requirements	4
3.3 Functional Requirements	4
3.4 Non-Functional Requirements	4
4. System Design	
4.1 System Design	5

4.2 Proposed Methodology 5

4.3 UML Design 6

4.3.1 Class Diagram 6

4.3.2 Use Case Diagram 7

4.3.3 Sequence Diagram 8

4.3.4 Component Diagram 8

4.3.5 Activity Diagram 9

4.4 Technology Description 10

5. Implementation

5.1 Hardware Implementation 11

5.2 Software Implementation 11

5.3 Algorithm 12

6. Testing

6.1 Introduction to Testing 14

6.2 Test Cases 15

7. Results

7.1 Automatic Lid Operation 16

7.2 Visual Results 16

8. Conclusion 18

9. Future Scope 19

10. References 20

1. INTRODUCTION

1.1 Introduction

Waste management is a critical challenge in urban environments. Traditional waste disposal methods are inefficient, unhygienic, and lack automation. With advancements in embedded systems and IoT, smart solutions can significantly improve waste handling.

1.2 Problem Statement

Traditional dustbins are manual and unhygienic. There is a need for smart systems that reduce human interaction and automate waste segregation.

Manual waste disposal systems:

- Require physical contact
- Do not segregate waste
- Promote unhygienic conditions
- Lack real-time monitoring

1.3 Project Objective

- Develop an automated dustbin
- Enable wet/dry waste segregation
- Ensure contactless operation
- Improve public hygiene
- Build a low-cost solution

2. LITERATURE SURVEY

Waste management has become a major challenge due to rapid urbanization and population growth. Many researchers have proposed smart systems to improve waste collection, segregation, and disposal. This section reviews existing works related to smart waste segregation dustbins.

2.1 Smart Dustbin Systems for Waste Management

Recent studies show that traditional waste management systems are inefficient and require high manual effort. Smart dustbin systems have been introduced to automate waste handling and improve hygiene. These systems help reduce overflow, labor cost, and environmental pollution.

Researchers have emphasized that smart bins play an important role in maintaining cleanliness in urban areas and preventing the spread of diseases caused by unmanaged waste.

2.2 Sensor-Based Waste Segregation

Several research works focus on using sensors for automatic waste segregation. Systems using ultrasonic sensors detect the presence of users, while moisture sensors help in identifying wet and dry waste.

A study proposed a smart dustbin using Arduino and sensors to classify waste automatically into categories, improving efficiency and reducing human intervention.

Another research work used ultrasonic sensors, moisture sensors, and servo motors to automate waste segregation, showing effective real-time performance.

2.3 Arduino-Based Smart Waste Systems

Many projects are developed using Arduino microcontrollers due to their low cost and ease of implementation. Arduino-based systems read sensor data and control actuators like servo motors to direct waste into appropriate bins.

Research indicates that such systems are efficient for real-time applications and can be implemented in homes, institutions, and public places.

2.4 Advanced Smart Dustbin Technologies

Some advanced systems integrate IoT, AI, and computer vision for accurate waste classification. These systems can monitor bin levels, send alerts, and improve waste collection efficiency.

However, these systems are more complex and expensive compared to basic sensor-based models.

2.5 Limitations of Existing Systems

From the literature, the following limitations are identified:

- High cost of advanced systems (AI, IoT-based)
- Complexity in implementation
- Maintenance issues in public environments
- Dependency on internet connectivity (in IoT systems)
- Manual segregation still required in many cases

2.6 Motivation for Proposed System

Based on the above studies, there is a need for:

- A low-cost and simple system
- Real-time operation without IoT dependency
- Efficient segregation using basic sensors
- Easy implementation for practical use

2.7 Summary

The literature survey shows that while many smart waste management systems exist, most are either complex or expensive. Therefore, the proposed project focuses on a simple, cost-effective, sensor-based smart dustbin using Arduino, ultrasonic sensor, and soil moisture sensor to achieve efficient real-time waste segregation.

3. REQUIREMENT SPECIFICATION

3.1 Software Requirements

- Arduino IDE
- Embedded C Programming
- Proteus (optional simulation)

3.2 Hardware Requirements

- Arduino Uno
- Ultrasonic Sensor (HC-SR04)
- Soil Moisture Sensor
- Servo Motor
- Power Supply
- Connecting wires
- Dustbin structure

3.3 Functional Requirements

- Detect user presence
- Open lid automatically
- Identify wet/dry waste
- Segregate waste accordingly

3.4 Non-Functional Requirements

- Low power consumption
- Reliability
- Fast response time
- Durability

4. SYSTEM DESIGN

4.1 System Design

The system consists of:

- Input: Sensors
- Processing: Arduino
- Output: Servo motor

4.2 Proposed Methodology

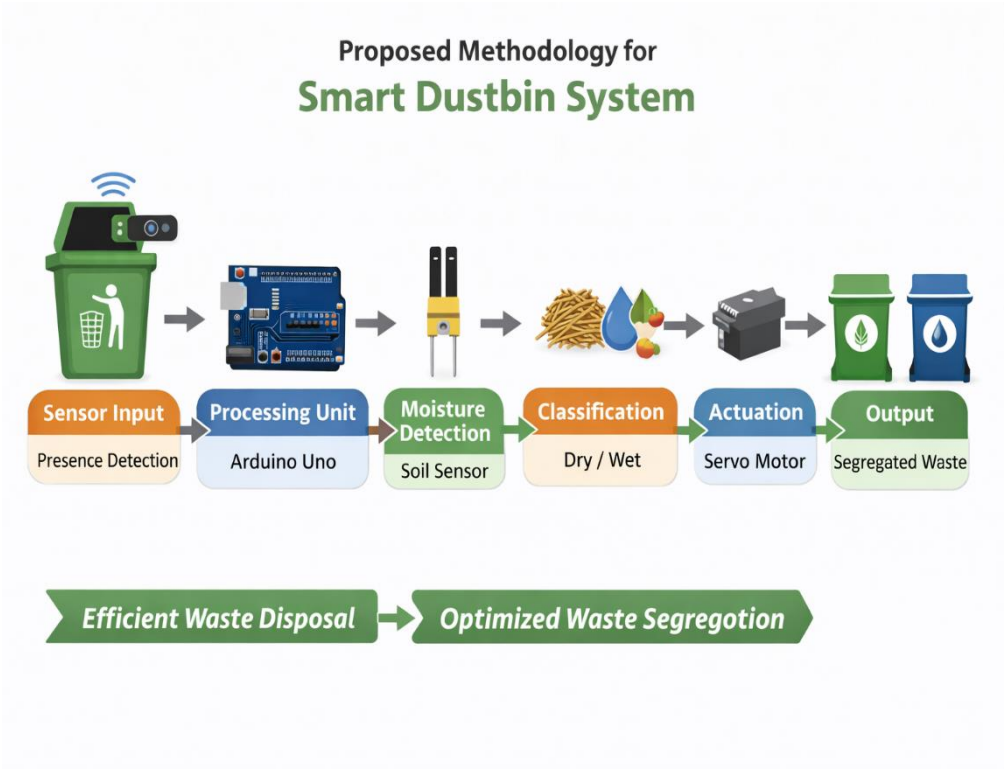

1. Ultrasonic sensor detects user presence
2. Arduino processes input
3. Servo motor opens lid
4. Moisture sensor checks waste type
5. Waste is directed accordingly

4.3 UML DESIGN

4.3.1 Class Diagram

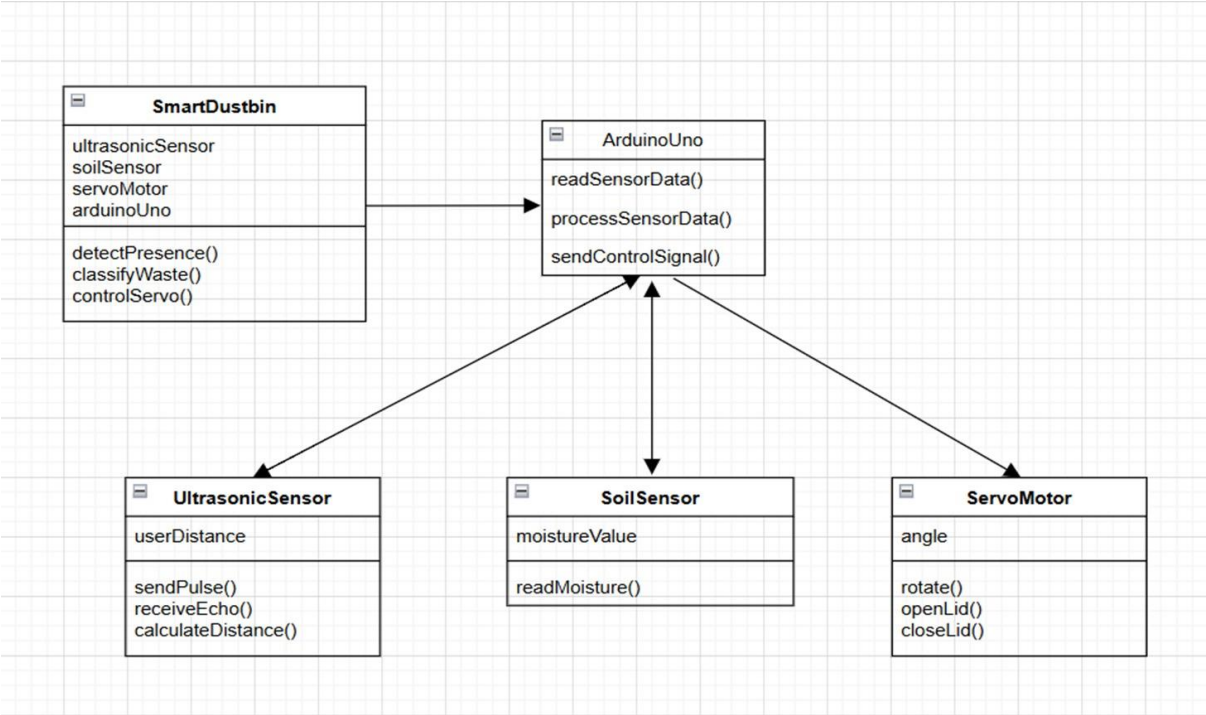

- Arduino Controller
- Sensor Module
- Motor Control
- Waste Segregation Unit

4.3.2 Use Case Diagram

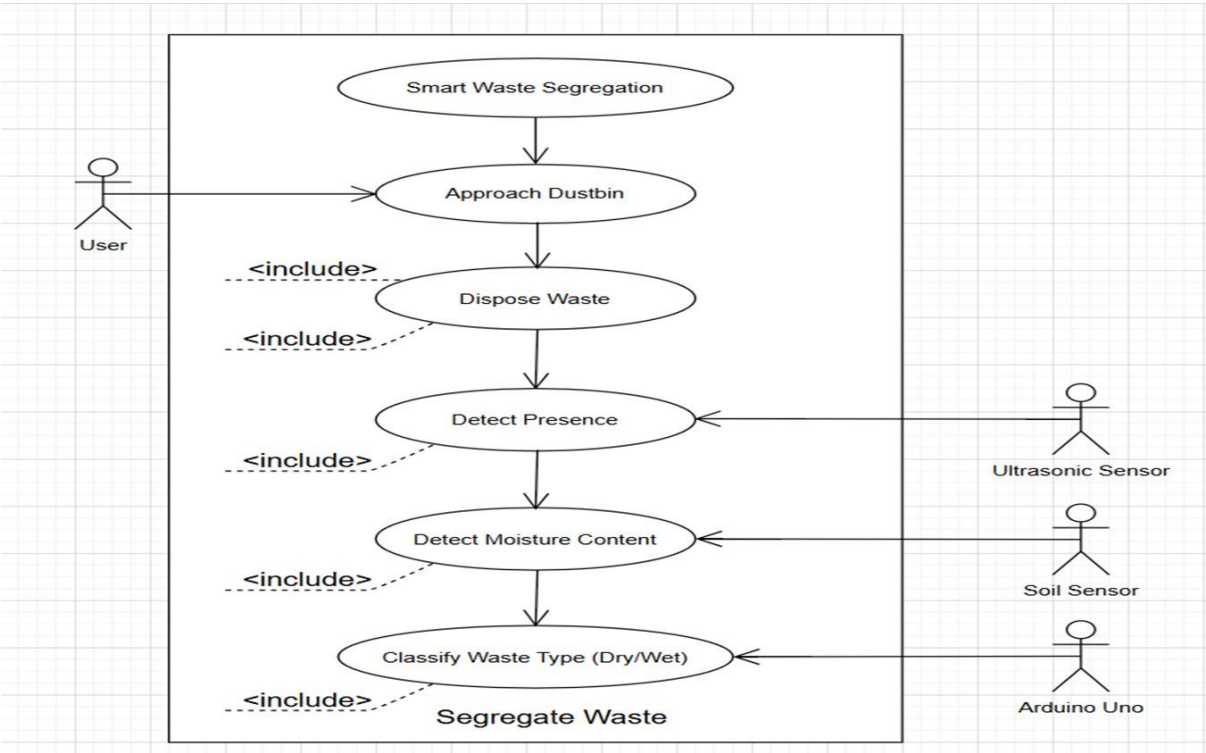

Actors:

- User

  Use cases:

- Approach bin
- Dispose waste
- Detect Presence
- Detect Moisture Content
- Classify Waste Type (Dry/Wet)

4.3.3 Sequence Diagram

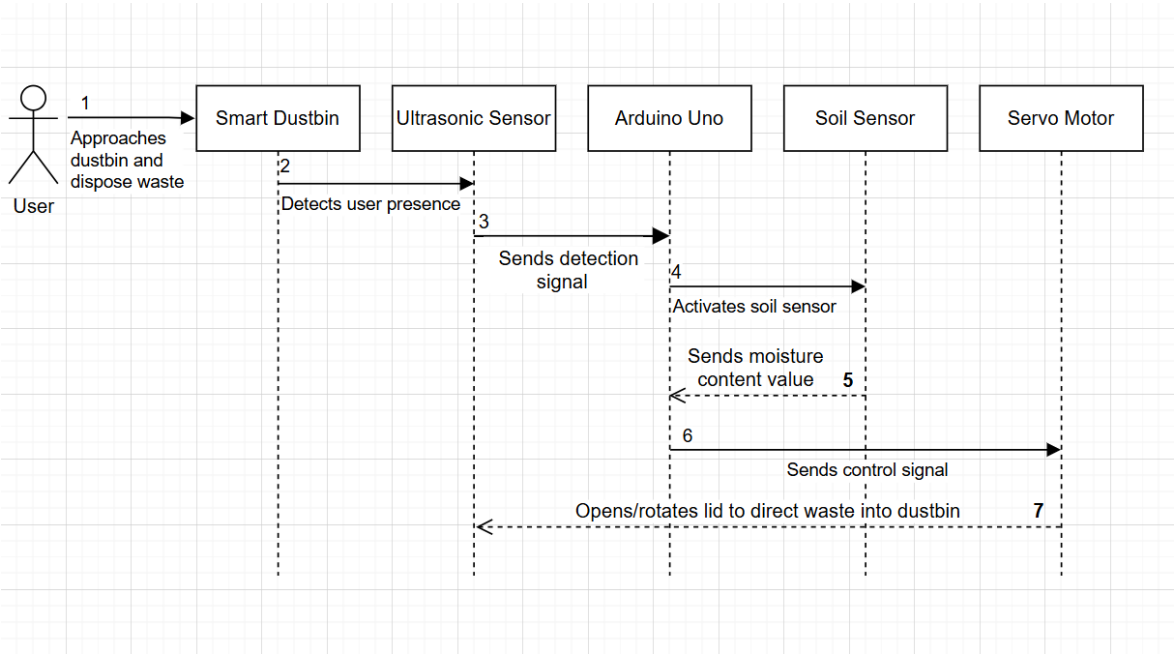

Flow:

User → Sensor → Arduino → Motor → Segregation

4.3.4 Component Diagram

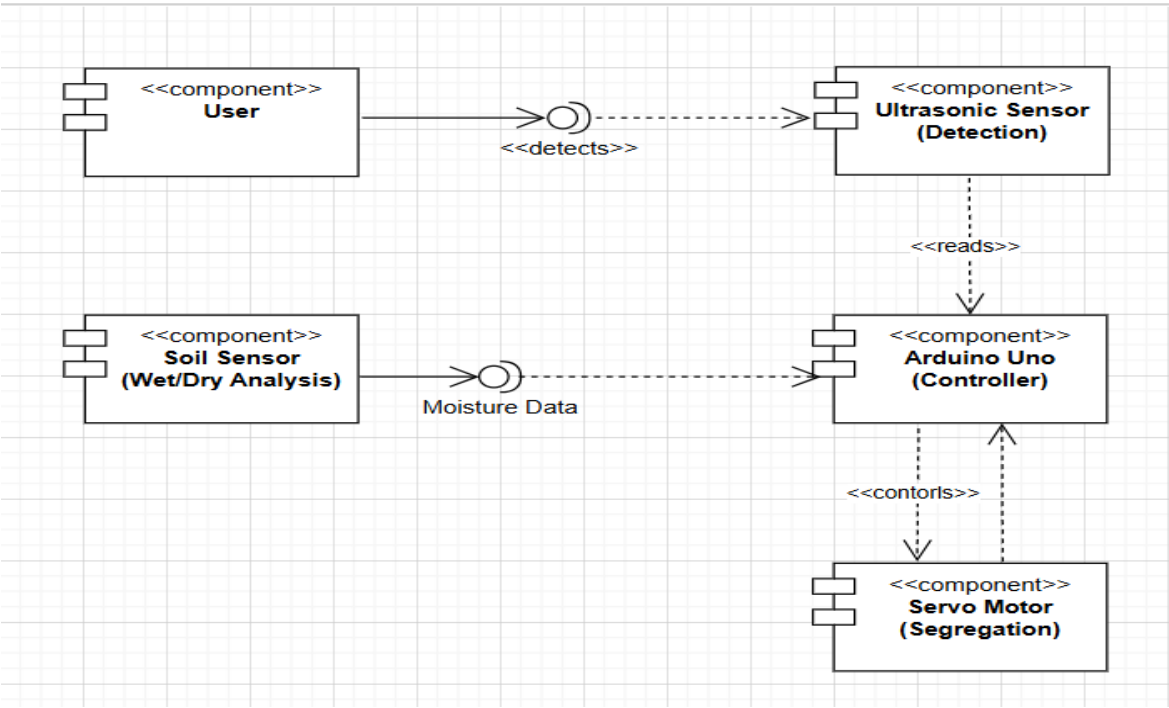

- Sensor unit
- Control unit
- Mechanical unit

4.3.5 Activity Diagram

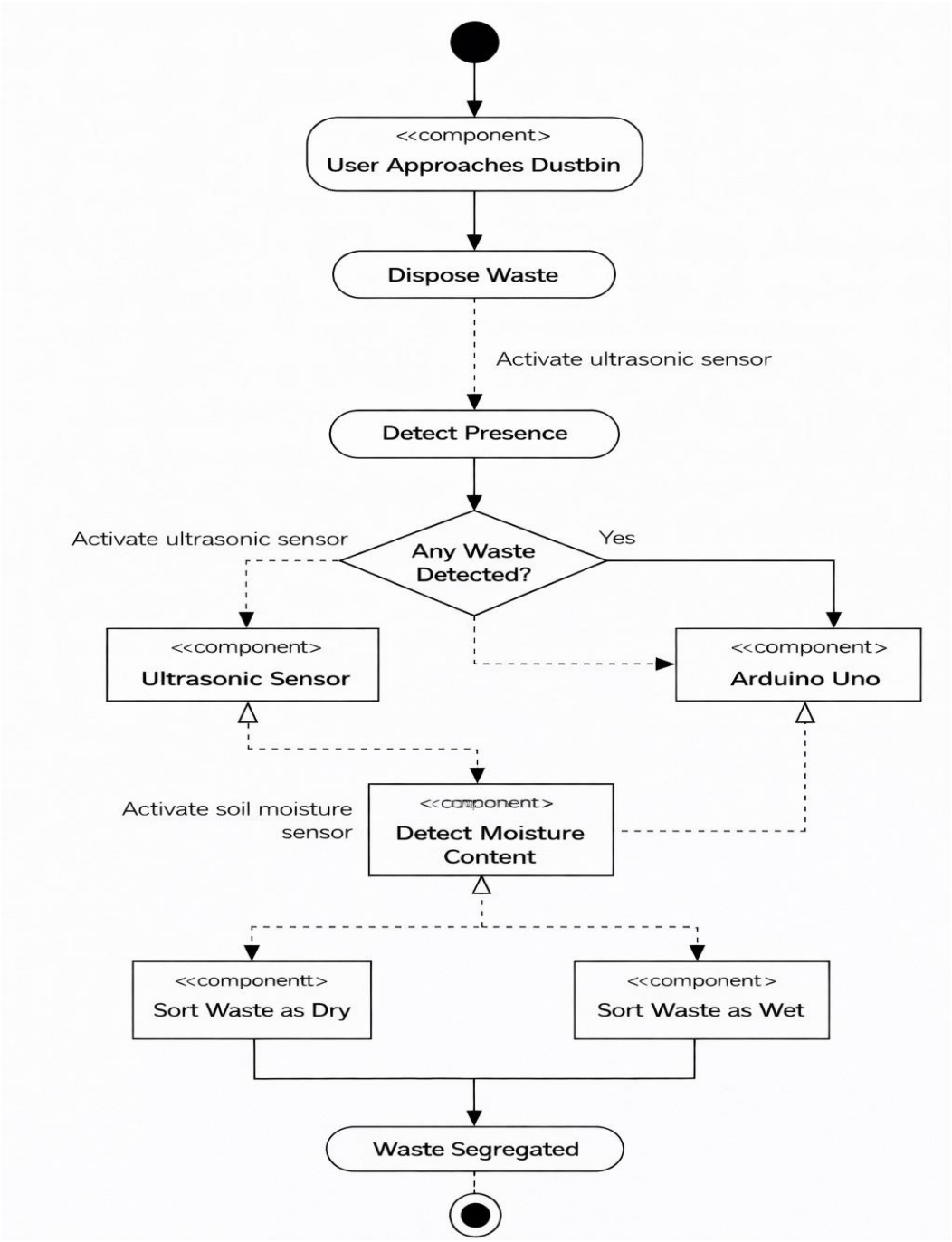

Start → Detect → Open lid → Check waste → Segregate → Close lid

4.4 Technology Description

The Smart Waste Segregation System uses a combination of embedded hardware components and sensor technologies to automate waste detection and classification. Each component plays a specific role in ensuring the smooth and efficient operation of the system.

- **Arduino Uno:** Microcontroller
- **Ultrasonic Sensor:** Distance detection
- **Soil Sensor:** Moisture detection
- **Servo Motor:** Lid movement

5. IMPLEMENTATION

5.1 Hardware Implementation

The hardware part of the Smart Waste Segregation System is designed using simple, cost-effective, and easily available components. The system integrates sensors, actuators, and a microcontroller to automate waste detection and segregation.

1. Microcontroller (Arduino):

The core component of the system is the Arduino board (such as Arduino Uno). It acts as the brain of the system by receiving input signals from sensors, processing them, and controlling the output devices like the servo motor. All components are connected to specific input/output pins of the Arduino.

2. Ultrasonic Sensor:

The ultrasonic sensor is used to detect the presence of an object (waste) near the dustbin. It works by sending ultrasonic waves and measuring the time taken for the echo to return. When a person brings waste close to the bin, the sensor detects it and sends a signal to the Arduino to open the lid.

3. Moisture Sensor:

The moisture sensor is used to determine whether the waste is wet or dry. It measures the moisture content present in the waste material. If the moisture level exceeds a predefined threshold, the waste is classified as wet; otherwise, it is considered dry.

5.2 Software Implementation

The software component is responsible for controlling the entire system through logical instructions written in the Arduino programming language using the Arduino IDE.

1. Programming Environment:

The code is written and uploaded using the Arduino IDE. It includes setup and loop functions, which initialize components and run continuously.

2. Sensor Data Processing:

The Arduino continuously reads data from the ultrasonic sensor to detect object presence. Once detected, it triggers further actions. The moisture sensor data is read as analog input and converted into meaningful values.

3. Decision-Making Logic:

Conditional statements (if-else) are used to make decisions:

- If an object is detected → open lid
- If moisture value is above threshold → classify as wet waste
- Else → classify as dry waste

4. Actuator Control:

Based on the decision, the Arduino sends signals to the servo motor:

- Open lid when waste is detected
- Rotate mechanism to direct waste
- Close lid after a delay

5. Real-Time Operation:

The system operates in real-time, meaning it continuously monitors the environment and responds instantly to user actions.

5.3 Algorithm

Step-by-step working of the system:

1. Start the system
2. Initialize sensors and servo motor
3. Continuously monitor distance using ultrasonic sensor
4. If an object is detected within a threshold distance:

- Open the lid using servo motor

5. Read moisture sensor value
6. Compare moisture value with predefined threshold
7. If moisture value is high:
    - Rotate mechanism to direct waste into wet bin
8. Else:
    - Direct waste into dry bin
9. Wait for a few seconds
10. Close the lid
11. Repeat the process

6. TESTING

6.1 Introduction to Testing

Testing is an important phase of the project to ensure that the Smart Waste Segregation Dustbin works correctly under real-time conditions. It involves verifying individual components and the complete system to check accuracy, reliability, and performance.

Unit Testing

Each component is tested individually to verify its functionality.

- Ultrasonic Sensor
    - Tested for accurate distance measurement
    - Verified detection of user presence
- Soil Moisture Sensor
    - Tested for correct moisture value detection
    - Checked response for wet and dry materials
- Servo Motor
    - Tested for rotation angles
    - Verified lid opening and closing
- Arduino Uno
    - Tested for proper execution of program
    - Verified input-output operations

Integration Testing

All components are connected together and tested as a complete system.

- Sensors are connected to Arduino Uno
- Arduino processes sensor data
- Servo motor responds to control signals

- Verified complete workflow from detection to segregation

System Testing

The entire system is tested in real-time conditions.

- User approaches dustbin
- System detects presence
- Waste is analyzed
- Correct segregation is performed

6.2 Test Cases

The system was tested using multiple test cases to verify its functionality. Each test case includes input conditions, expected output, and actual results.

Test Case	Input Condition	Expected Output	Actual Result	Status
Object Detection	User approaches bin	Lid opens automatically	Lid opened	Pass
No Object	No user near	Lid remains closed	Lid stayed closed	Pass
Wet Waste Detection	Moisture sensor reads high	Waste directed to wet bin	Correctly sorted	Pass
Dry Waste Detection	Moisture sensor reads low	Waste directed to dry bin	Correctly sorted	Pass
Lid Closure	After waste disposal	Lid closes after few seconds	Closed properly	Pass
Continuous Use	Multiple users continuously	System works without delay or failure	Stable operation	Pass

These test cases confirm that the system behaves as expected in different scenarios.

7. RESULTS

7.1 Automatic Lid Operation

The system achieved reliable automatic lid control using the ultrasonic sensor and servo motor.

- The lid opened instantly when a user approached the bin within the defined range.
- The response time was very fast (less than 1 second), ensuring a smooth user experience.
- The mechanism operated smoothly without mechanical errors during repeated testing.

This feature helps in minimizing physical contact with the dustbin, making it more user-friendly and hygienic.

7.2 Visual Results (Add in Document)

You can include the following images in your report to support your results:

- Image of the complete working model
- Image showing lid opening automatically
- Image showing wet waste being detected
- Image showing dry waste segregation
- Circuit connection setup
- Arduino setup with sensors

8. CONCLUSION

The Smart Dustbin system presented in this project provides an effective solution for improving hygiene and waste management through automation. By using sensors and an Arduino-based control system, the dustbin operates without physical contact, reducing the risk of contamination.

This project demonstrates how simple embedded systems can enhance everyday sanitation. Future enhancements may include IoT-based fill-level monitoring, mobile notifications, solar power integration, and advanced waste segregation techniques to further improve efficiency and sustainability.

9. FUTURE SCOPE

9.1 Integration with IoT (Internet of Things)

The system can be upgraded by integrating IoT technology to enable remote monitoring and control.

- Sensors can send real-time data to cloud platforms.
- Municipal authorities or users can monitor waste levels from anywhere.
- Data analytics can help optimize waste collection schedules.
- Alerts can be generated when bins are full or require maintenance.

This will make the system more suitable for smart city applications.

9.2 AI-Based Waste Classification

Instead of relying only on a moisture sensor, Artificial Intelligence can be used for more accurate waste identification.

- Image processing using cameras can identify different types of waste (plastic, metal, organic, etc.).
- Machine learning models can improve classification accuracy over time.
- It can handle complex or mixed waste more effectively.

This enhancement will significantly improve the system's intelligence and adaptability.

10. REFERENCES

2. Gubbi, J., Buyya, R., Marusic, S., & Palaniswami, M., "Internet of Things (IoT): A Vision, Architectural Elements, and Future Directions," *Future Generation Computer Systems*, vol. 29, no. 7, pp. 1645–1662, 2013.
3. Arduino, "Arduino UNO Technical Specifications," Arduino.cc, 2020.
4. Singh, A., & Sharma, R., "Automatic Smart Dustbin Using Sensors," *International Journal of Engineering Research and Technology (IJERT)*, vol. 7, no. 6, 2018.
5. IR Sensor Module Datasheet.
6. Soil Moisture Sensor Datasheet.
7. Servo Motor Datasheet.
8. IEEE Smart Cities Initiative, "Smart Waste Management and Automation."